Energy Isolation L-O-X® with EEZ-ON® Valves
15 & 27 Series

Product Catalog

ROSS™
a global family

Manual Lockout L-O-X® Valves with Soft Start EEZ-ON® 15 Series
Product Overview

Energy Isolation for Lockout/Tagout (LOTO) – Lockout with Soft-Start

The L-O-X® with EEZ-ON® operation valve combines shut-off certainty with gradual pressurization upon start-up.

Modular	Classic
	

Illustration examples.

Combining two functions critical to safety concerns in any application, the ROSS L-O-X® valve with EEZ-ON® operation provides the shutdown and the gradual start-up (or, "Soft-Start") capabilities today's systems require. In addition, because the L-O-X® valve with EEZ-ON® operation is two units in one, you eliminate the need for multiple components.

The valve permits the gradual increase of downstream pressure in the pneumatic circuit that has just been actuated. The same unit also features a shut-off and lockout of system air to limit inadvertent actuation. Exhaust port is threaded for the installation of a silencer or a line for remote exhausting.

VALVE FEATURES	
Unique Appearance	Easily identifiable with a yellow body and a blue handle to control ON/OFF positions
Soft-Start Function	Gradual re-application of pneumatic pressure prevents rapid equipment movement at startup
Quick Energy Dump	Full size exhaust ports (equal to or larger than supply) provide rapid exhaust of downstream air and are threaded for silencers or remote exhaust lines
Locking Protection	Design only allows the valve to be lockable in the OFF position
PTFE Seals	Fluorocarbon slipper seals for easy shifting, even after long periods of inactivity
Visible Pressure Indication Option	Includes integrated sensing port for pressure verification with either a visual pop-up indicator or electrical pressure switch
Mounting	Inline or Surface

NOTE: Per specifications and regulations, these products are defined as energy isolation devices, NOT AS EMERGENCY STOP DEVICES.

Specifications

STANDARD SPECIFICATIONS					
GENERAL	Function			3/2 Valve	
	Construction Design			Spool	
	Actuation			Pneumatic	Manual
	Mounting	Type	Modular	Inline	
			Classic	Inline or Surface	
		Orientation	Any, preferably vertical; easy access to the handle		
	Connection			Threaded	NPT, G
	Minimum Operation Frequency			Once per month, to ensure proper function	
OPERATING CONDITIONS	Temperature		Ambient	40° to 175°F (4° to 80°C)	
			Media		
	Flow Media			Filtered air	
	Operating Pressure	Valve Style	Modular	0 to 200 psig (0 to 14 bar)	
			Classic	0 to 150 psig (0 to 10 bar)	
LOCK HOLE MEASURES	Diameter			0.27 inch (7.0 mm)	
	Length of Hole			0.43 inch (10.9 mm)	
CONSTRUCTION MATERIAL	Valve Body			Cast Aluminum	
	Spool			Stainless Steel	
	Seals			Fluorocarbon	

IMPORTANT NOTE: Please read carefully and thoroughly all of the **CAUTIONS, WARNINGS** on the inside back cover.

PRODUCT CREDENTIALS	
Performance Level Per ISO 13849-1:2015 Cat. 1 PL c	**Declaration of Conformity** EAC

Ordering Information

MANUAL LOCKOUT L-O-X® VALVES WITH SOFT-START EEZ-ON® — 3-Way 2-Position Valves

Valve Style	Body Size	Port Size		Valve Model Number	
		In-Out	Exhaust	NPT Thread	G Thread
Modular	3/4	1/4	3/4	Y1523A2103	YD1523A2103
	3/4	3/8	3/4	Y1523A3103	YD1523A3103
	3/4	1/2	3/4	Y1523A4103	YD1523A4103
	3/4	3/4	3/4	Y1523A5113	YD1523A5113
Classic	1/2	3/8	3/4	Y1523B3102	YD1523B3102
	1/2	1/2	3/4	Y1523B4102	YD1523B4102
	1/2	3/4	3/4	Y1523B5112	YD1523B5112
	1		1-1/4	Y1523B5102	YD1523B5102
	1	1	1-1/4	Y1523B6102	YD1523B6102
	1	1-1/4	1-1/4	Y1523B7112	YD1523B7112

Size			Flow Cv (Nl/min)		Weight lb (kg)
Body	Port 1, 2	Port 3	1-2	2-3	
3/4	1/4	3/4	3.7 (3600)	7.8 (7700)	1.7 (0.8)
3/4	3/8	3/4	5.1 (5000)	8.3 (8200)	
3/4	1/2	3/4	5.5 (5400)	8.6 (8500)	1.8 (0.8)
3/4	3/4	3/4	5.6 (5500)	8.1 (8000)	
1/2	3/8	3/4	3.6 (3500)	2.8 (2800)	2.0 (0.9)
1/2	1/2	3/4	4.9 (4800)	3.5 (3800)	
1/2	3/4	3/4	5.1 (5000)	2.9 (2900)	
1		1-1/4	10 (9800)	9.0 (8900)	3.0 (1.4)
1	1	1-1/4	11 (11000)	9.0 (8900)	
1	1-1/4	1-1/4	12 (12000)	9.0 (8900)	

Valve Schematic

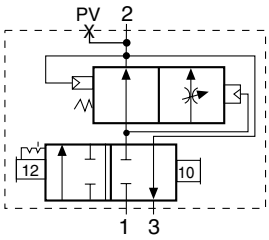

Valve Operation

Valve Closed

With a short push of the blue handle inward, the flow of supply is blocked and downstream air is exhausted via the exhaust port at the bottom of the valve. It is required by OSHA and ISO 14118 that the L-O-X® valves with EEZ-ON® operation be padlocked in this position to prevent the handle from being pulled outward inadvertently when potential for human injury exists or servicing machinery.

EEZ-ON® Function

Modular Style Valve

The blue handle will only shift part way due to a mechanical stop button allowing only partial flow from inlet to downstream causing the pressure to increase at a slower rate.

Classic Style Valve

With the blue handle pulled out, the adjustable needle valve (accessed through top of handle) setting determines the rate of pressure buildup.

Valve Open

Modular Style Valve

Pressing the mechanical stop button allows the blue handle to be shifted completely open allowing full flow from inlet to downstream.

Classic Style Valve

After the blue handle is pulled out and pressure downstream has gradually increased, the valve automatically changes to a fully open state, allowing full flow from inlet to downstream. Full flow is achieved at approximately 50% of inlet pressure.

Valve Style		Valve Closed	EEZ-ON® Function	Valve Open
Modular		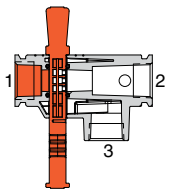	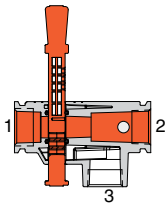	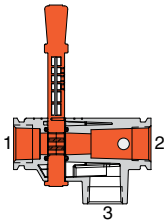
Classic		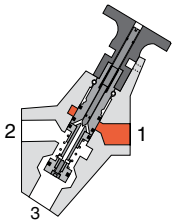	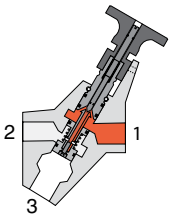	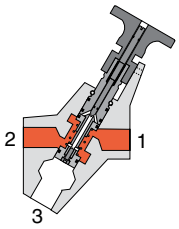

DIMENSIONS	Inches (mm)
Modular	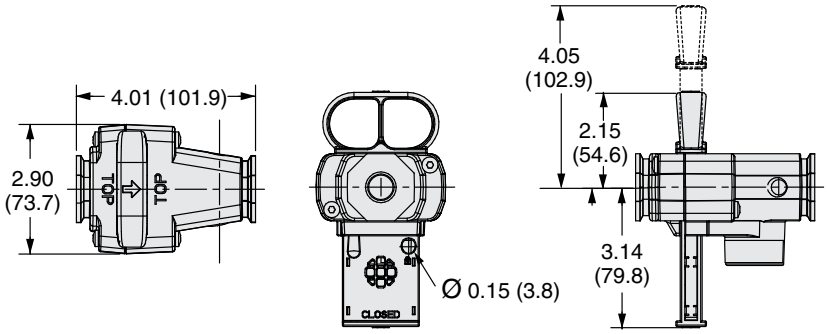

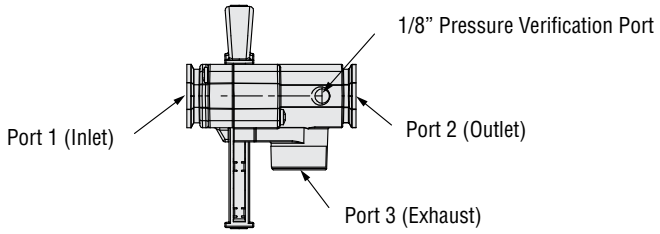

DIMENSIONS		Inches (mm)
Classic	Body Size 1/2	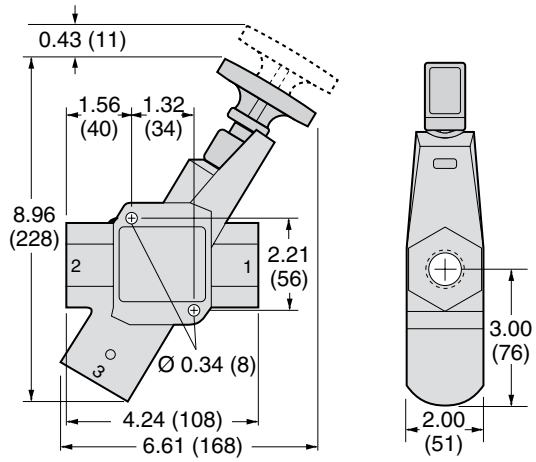
	Body Size 1	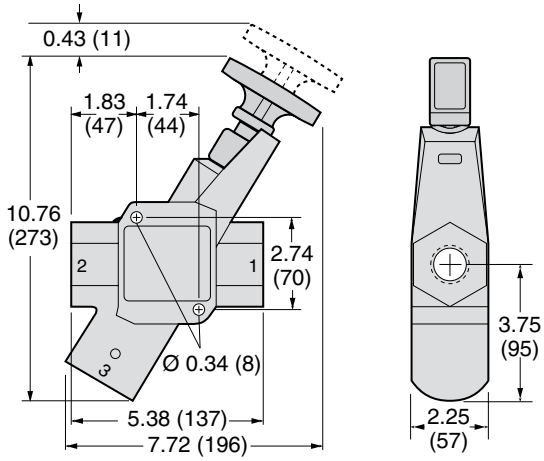

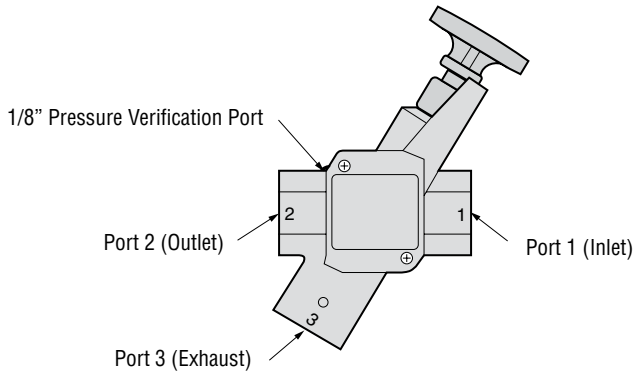

Valves with Manual Lockout L-O-X® Control with Soft-Start EEZ-ON® 27 Series Product Overview

Energy Isolation for Lockout/Tagout (LOTO) – Lockout with Soft-Start

The Lockout L-O-X® valve is used to block the supply and remove the downstream pressure from the circuit or machine and allow the employee to lockout the pneumatic energy for safe machine access. The shut-off function of the solenoid pilot controlled L-O-X® valve is the same as that of the manual L-O-X® valves.

The Soft-Start EEZ-ON® valve provides gradual re-application of pneumatic energy to prevent rapid equipment movement at startup.

Solenoid Pilot Controlled	Pressure Controlled
	

Illustration examples.

The solenoid pilot controlled valve allows the air supply to be turned on or off by remote electrical control whenever the L-O-X® handle is in the outward position. Air flows only if the L-O-X® handle is outward and the solenoid pilot is energized. When the L-O-X® handle is pushed in, air will not flow regardless of the pilot being energized or not. As with all L-O-X® valves, the L-O-X® handle can be padlocked in the closed position. As a further precaution against inadvertent air flow, the solenoid pilot controlled has no manual override.

After energy isolation has been completed the rapid introduction of high pressure can cause motion and unnecessary machine wear or damage. The L-O-X® valve with soft-start EEZ-ON® function features all the advantages of the L-O-X® with the added benefit of causing the pressure to increase gradually allowing for a controlled motion to occur.

VALVE FEATURES	
Poppet Design	Dirt tolerant, wear compensating for quick response and high flow capacity
Manual Lockout Control	Operated like the manual lockout L-O-X® valve, the position of the blue handle indicates instantaneous full flow pressurizing or exhausting capability
Solenoid Pilot	Allows the air supply to be turned on or off by remote electrical control when valve is not in the lockout position
Soft-Start Control	An adjustable restriction within the EEZ-ON® valve determines the rate of downstream pressure buildup, and consequently the time delay for the full opening of the EEZ-ON® valve
Quick Energy Dump	Full size exhaust ports (equal to or larger than supply) provide rapid exhaust of downstream air and are threaded for silencers or remote exhaust lines
Locking Protection	Design only allows the valve to be lockable in the OFF position

NOTE: Per specifications and regulations, these products are defined as energy isolation devices, NOT AS EMERGENCY STOP DEVICES.

Specifications

STANDARD SPECIFICATIONS				
GENERAL	Function		3/2 Valve, Normally Closed	
	Construction Design		Poppet & Spool	
	Actuation		Electrical	Manual
			Pneumatic	
	Mounting	Type	Inline	
		Orientation	Any, preferably vertical; easy access to the handle	
	Connection		Threaded	NPT, G
	Minimum Operation Frequency		Once per month, to ensure proper function	
OPERATING CONDITIONS	Temperature	Solenoid Manual Lockout Controlled Valves	Ambient	40° to 120°F (4° to 50°C)
			Media	40° to 175°F (4° to 80°C)
		Manual Lockout Controlled Valves	Ambient	40° to 175°F (4° to 80°C)
			Media	
	Flow Media		Filtered air	
	Operating Pressure		15 to 150 psig (1 to 10 bar)	
	External Pilot Supply (Solenoid and Manual Lockout Controlled only)		Must be equal to or greater than inlet pressure	
ELECTRICAL DATA FOR SOLENOID PILOT VALVES	Solenoids	Current Flow	Operating Voltage	Power Consumption (each solenoid)
		DC	24 volts	14 watts
		AC	110-120 volts, 50/60 Hz	87 VA inrush, 30 VA holding
			230 volts, 50/60 Hz	
		Rated for continuous duty		
CONSTRUCTION MATERIAL	Valve Body		Cast Aluminum	
	Poppet		Acetal and Stainless Steel	
	Spool (Lockout Valve)		Stainless Steel	
	Seals		Buna-N; Fluorocarbon	
SAFETY DATA	Safety Integrity Level (SIL)	Certified by TÜV Rheinland in accordance to IEC 61508 and IEC 61511 safety integrity level 2 (SIL 2) and EN ISO 13849-1, PL c (with application specific diagnosis) in singular application with HFT = 0 and SIL 3 and PL e in redundant application with HFT≥1, for details see certificate.		

IMPORTANT NOTE: Please read carefully and thoroughly all of the **CAUTIONS, WARNINGS** on the inside back cover.

PRODUCT CREDENTIALS			
Performance Level Per ISO 13849-1:2015	**Safety Integrity Level** Per IEC 2061:2001	**Declaration of Conformity**	**Certificate of Compliance**
Cat. 1 PL c	SIL 2 Functional Safety	EAC	C US Solenoid Pilot Valves

Ordering Information

SOLENOID MANUAL LOCKOUT CONTROLLED VALVES WITH SOFT-START — 3-Way 2-Position Valves

Port Size		Body Size	Valve Model Number					
			NPT Thread			G Thread		
In-Out	Exhaust		24 V DC	110-120 V AC	230 V AC	24 V DC	110-120 V AC	230 V AC
1/4	1/2	3/8	Y2773B2075W	Y2773B2075Z	Y2773B2075Y	YD2773B2075W	YD2773B2075Z	YD2773B2075Y
3/8	1/2	3/8	Y2773B3075W	Y2773B3075Z	Y2773B3075Y	YD2773B3075W	YD2773B3075Z	YD2773B3075Y
1/2	1/2	3/8	Y2773B4085W	Y2773B4085Z	Y2773B4085Y	YD2773B4085W	YD2773B4085Z	YD2773B4085Y
	1	3/4	Y2773B4075W	Y2773B4075Z	Y2773B4075Y	YD2773B4075W	YD2773B4075Z	YD2773B4075Y
3/4	1	3/4	Y2773B5075W	Y2773B5075Z	Y2773B5075Y	YD2773B5075W	YD2773B5075Z	YD2773B5075Y
1	1	3/4	Y2773B6085W	Y2773B6085Z	Y2773B6085Y	YD2773B6085W	YD2773B6085Z	YD2773B6085Y
	1-1/2	1-1/4	YD2773B6075W	YD2773B6075Z	YD2773B6075Y	YD2773B6075W	YD2773B6075Z	YD2773B6075Y
1-1/4	1-1/2	1-1/4	YD2773B7075W	YD2773B7075Z	YD2773B7075Y	YD2773B7075W	YD2773B7075Z	YD2773B7075Y
1-1/2	1-1/2	1-1/4	YD2773B8085W	YD2773B8085Z	YD2773B8085Y	YD2773B8085W	YD2773B8085Z	YD2773B8085Y

For other voltages, consult ROSS.

Size			Flow Cv (Nl/min)		Weight lb (kg)
Port 1, 2	Port 3	Body	1-2	2-3	
1/4	1/2	3/8	1.9 (1900)	3.3 (3200)	5.3 (2.4)
3/8	1/2	3/8	2.9 (2800)	4.4 (4300)	
1/2	1/2	3/8	3.8 (3800)	5.0 (4900)	
	1	3/4	6.2 (6100)	9.4 (9300)	6.0 (2.7)
3/4	1	3/4	8.2 (8100)	10 (9800)	
1	1	3/4	9.1 (9000)	12 (1200)	
	1-1/2	1-1/4	21 (2100)	27 (27000)	9.5 (4.3)
1-1/4	1-1/2	1-1/4	29 (29000)	29 (29000)	
1-1/2	1-1/2	1-1/4	30 (30000)	30 (30000)	

Valve Schematic

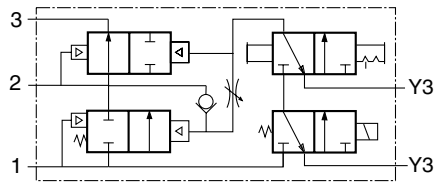

NOTE: Per specifications and regulations, these products are defined as energy isolation devices, NOT AS EMERGENCY STOP DEVICES.

MANUAL LOCKOUT CONTROLLED VALVES WITH SOFT-START

3-Way 2-Position Valves

Port Size		Body Size	Valve Model Number	
In-Out	Exhaust		NPT Thread	G Thread
1/4	1/2	3/8	Y2783B2055	YD2783B2055
3/8	1/2	3/8	Y2783B3055	YD2783B3055
1/2	1/2	3/8	Y2783B4065	YD2783B4065
	1	3/4	Y2783B4055	YD2783B4055
3/4	1	3/4	Y2783B5055	YD2783B5055
1	1	3/4	Y2783B6065	YD2783B6065
	1-1/2	1-1/4	Y2783A6055	YD2783A6055
1-1/4	1-1/2	1-1/4	Y2783A7055	YD2783A7055
1-1/2	1-1/2	1-1/4	Y2783A8065	YD2783A8065

Size			Flow Cv (Nl/min)		Weight lb (kg)
Port 1, 2	Port 3	Body	1-2	2-3	
1/4	1/2	3/8	1.9 (1900)	3.3 (3200)	4.3 (2.0)
3/8	1/2	3/8	2.9 (2800)	4.4 (4300)	
1/2	1/2	3/8	3.8 (3800)	5.0 (4900)	
	1	3/4	6.2 (6100)	9.4 (9300)	4.8 (2.2)
3/4	1	3/4	8.2 (8100)	10 (9800)	
1	1	3/4	9.1 (9000)	12 (1200)	
	1-1/2	1-1/4	21 (2100)	27 (27000)	7.9 (3.6)
1-1/4	1-1/2	1-1/4	29 (29000)	29 (29000)	
1-1/2	1-1/2	1-1/4	30 (30000)	30 (30000)	

Valve Schematic

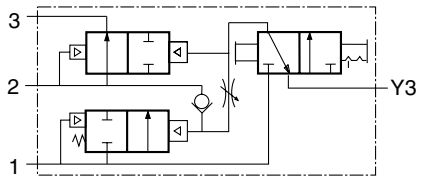

NOTE: Per specifications and regulations, these products are defined as energy isolation devices, NOT AS EMERGENCY STOP DEVICES.

Solenoid Manual Lockout Controlled Valves with Soft-Start

L-O-X® Handle Open and Pilot Not Energized

Pilot air is blocked by the pilot. Any downstream pressure forces piston B (which slides on the valve stem) upward. This opens the exhaust port and vents the downstream line.

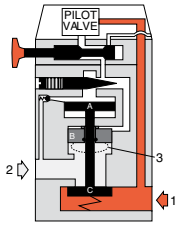

Full Pressure

When the pressure on piston A reaches approximately 50 percent of inlet pressure, it is forced downward and opens inlet poppet C. Full inlet pressure now flows freely to the outlet port.

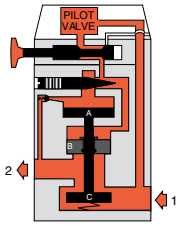

L-O-X® Handle Open and Pilot Energized

Pilot air forces piston B downward to close the exhaust port. Pilot air flows past the adjusting needle, opens the ball check and begins slowly to pressurize the outlet line. At the same time, pressure is building up on piston A.

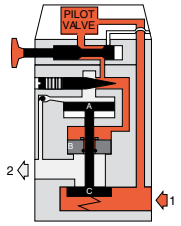

L-O-X® Handle Closed

At any time the L-O-X® handle can be pushed inward, thereby closing off the flow of pilot air. Pilot air above pistons A and B is then vented to atmosphere. Piston A moves upward and closes inlet poppet C. Sliding piston B also moves upward to open the exhaust port and vents the downstream line.

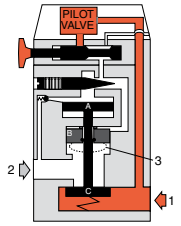

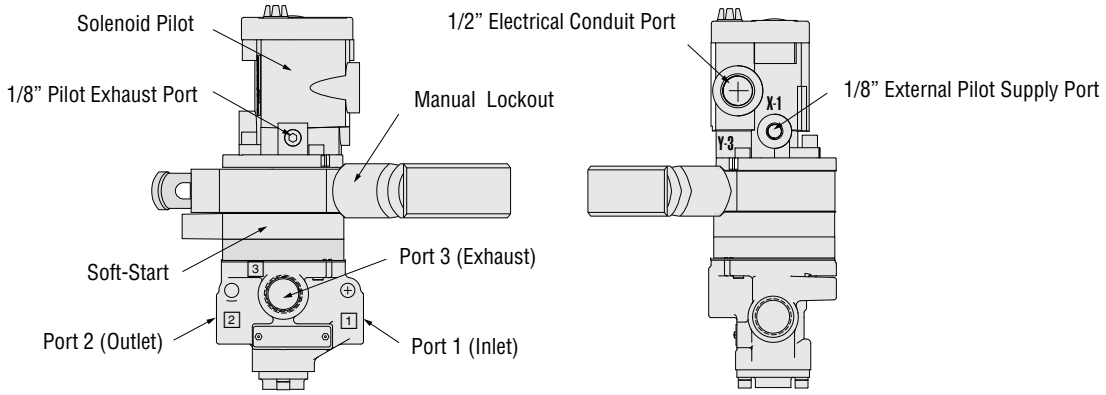

Manual Lockout Controlled Valves with Soft-Start

L-O-X® Valve (Handle) Open

Pilot air forces piston B downward to close the exhaust port. Pilot air flows past the adjusting needle, opens the ball check and begins slowly to pressurize the outlet line. At the same time, pressure is building up on piston A.

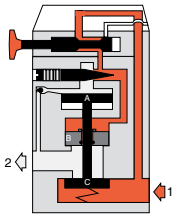

Full Pressure

With a short push of the red handle inward the flow of supply air is blocked and downstream air is exhausted via the exhaust port. Air pressure on the inlet and exhaust poppets produces a large closing force. The L-O-X® valve should be padlocked in this position to prevent the handle from being pulled outward inadvertently when potential for human injury exists or servicing machinery.

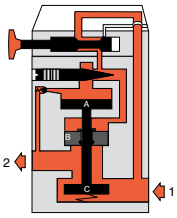

L-O-X® Valve (Handle) Closed

Pilot air forces piston B downward to close the exhaust port. Pilot air flows past the adjusting needle, opens the ball check and begins slowly to pressurize the outlet line. At the same time, pressure is building up on piston A.

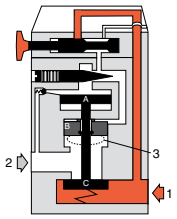

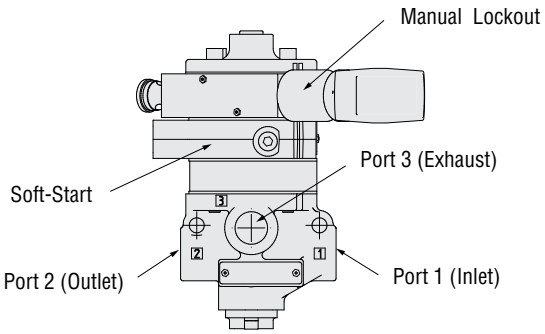

Solenoid Manual Lockout Controlled Valves with Soft-Start

DIMENSIONS	Inches (mm)
Body Size 3/8	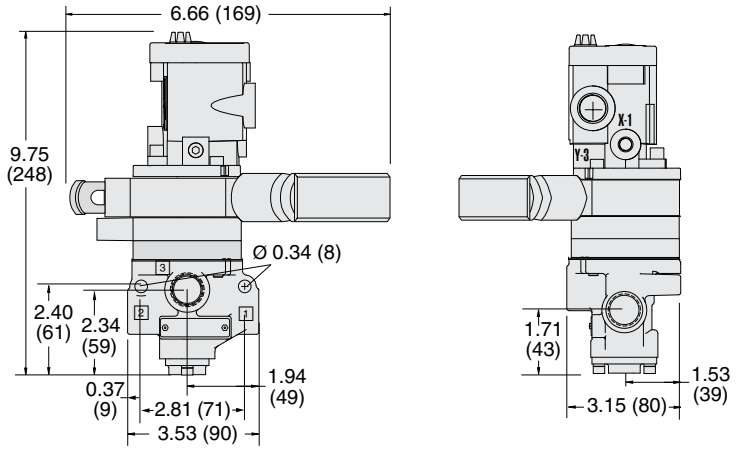
Body Size 3/4	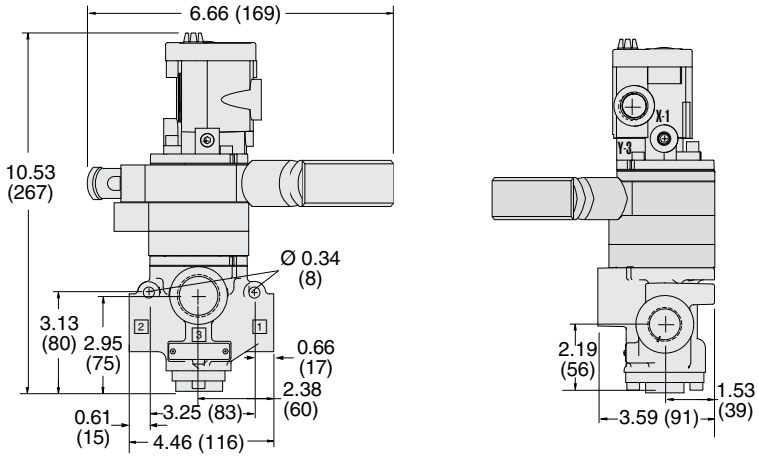
Body Size 1-1/4	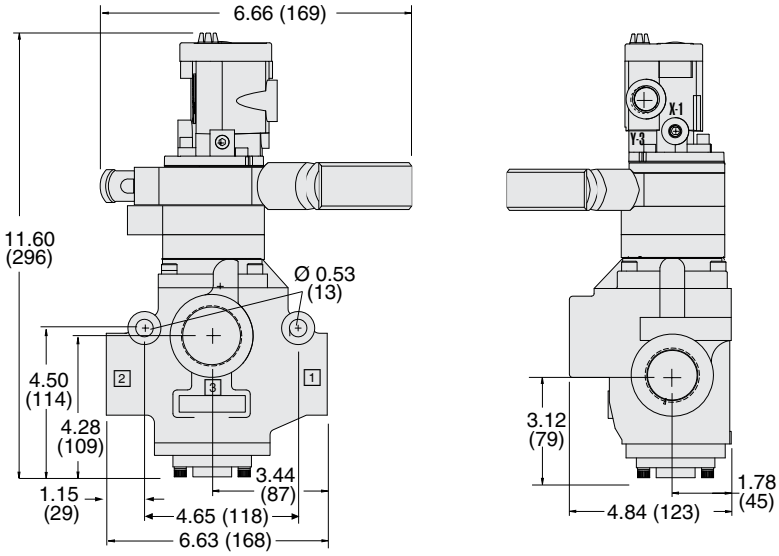

Manual Lockout Controlled Valves with Soft-Start

DIMENSIONS	Inches (mm)
Body Size 3/8	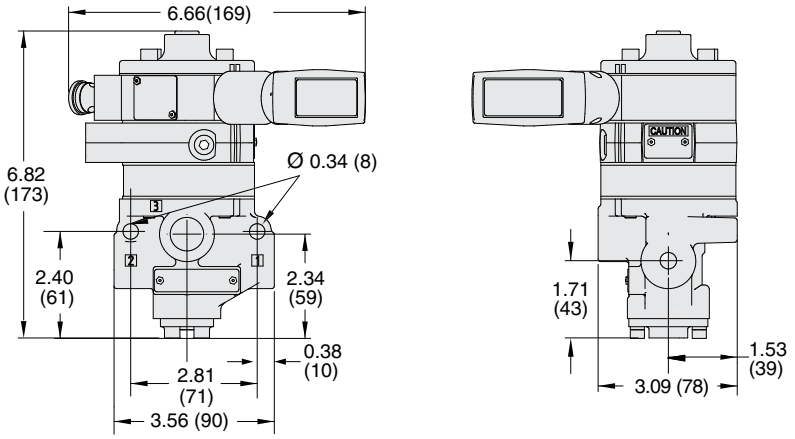
Body Size 3/4	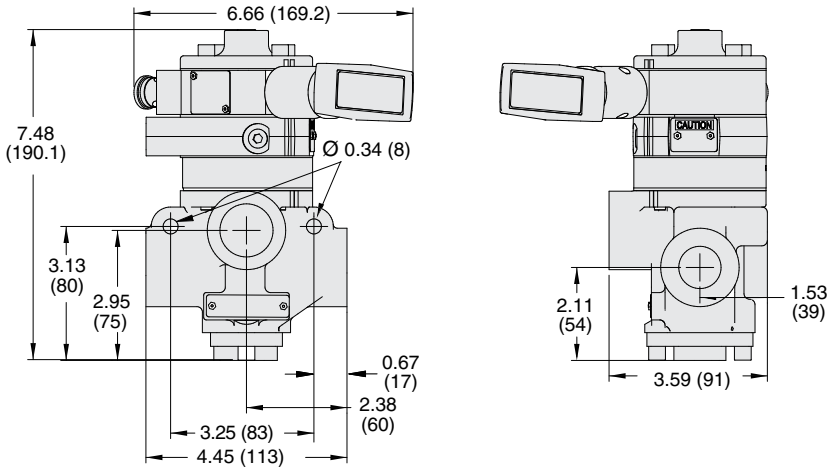
Body Size 1-1/4	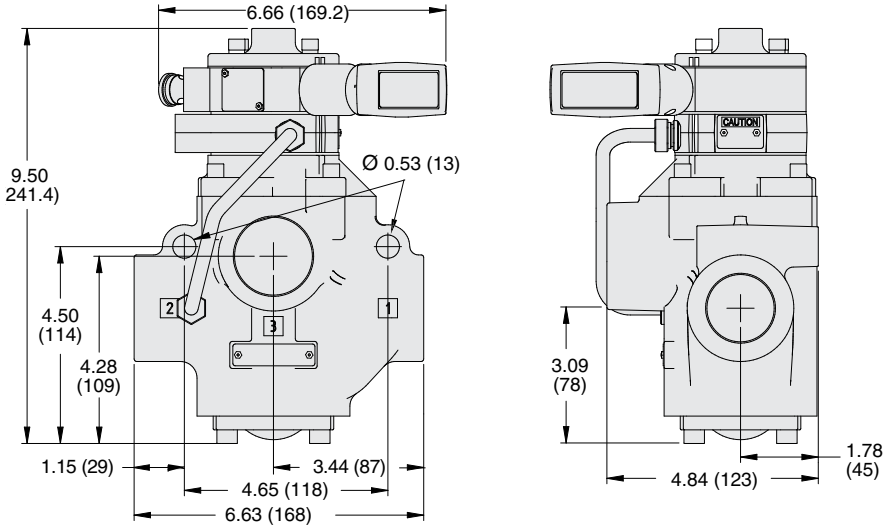

ENERGY RELEASE VERIFICATION

Visual Pressure Indicator	Pressure Switch
	

Illustration examples.

Visual Pressure Indicator	Verification Type	Installation Location	Indicator Type	Model Number	Port Thread
	Pneumatic	Pressure Sensing Port	Visual Pop-up Pin	988A30	1/8 NPT

Pressure Switch	Verification Type	Installation Location	Connector Type	Model Number	Port Thread	Factory Preset psi (bar)
	Electrical	Pressure Sensing Port or Downstream	DIN EN 175301-803 Form A	586A86	1/8 NPT	5 (0.3) falling

Pinout

DIN EN 175301-803 Form A

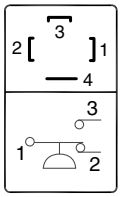

1 - Common
2 - Normally Closed
3 - Normally Open
4 - Ground (Not Used)

EXHAUST SILENCERS

Illustration example.

	SPECIFICATIONS	Silencer Material	Pressure Range psig (bar)	Schematic
Silencers		Aluminum	0-290 (0-20) maximum	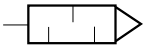

Port Size	Thread Type	Flow C_V (Nl/min)	Model Number		Dimensions inches (mm)		Weight lb (kg)
			NPT Thread	R/Rp Thread	Length	Hex Size (D)	
1/2	Male	6.8 (6700)	5500A4003	D5500A4003	3.6 (9)	1.25 (32)	0.2 (0.1)
3/4	Male	7.2 (7100)	5500A5013	D5500A5013	3.6 (9)	1.25 (32)	0.2 (0.1)
		15 (15000)	5500A5003	D5500A5003	5.3 (14)	2.0 (51)	0.9 (0.4)
1	Male	18 (18000)	5500A6003	D5500A6003	5.4 (14)	2.0 (51)	0.9 (0.4)
1-1/4	Male	24 (23000)	5500A7013	D5500A7013	5.5 (14)	2.0 (51)	0.9 (0.4)
	Female	42 (41000)	5500A7001	D5500A7001	5.7 (14)	2.5 (64)	1.4 (0.6)
1-1/2	Female	39 (38000)	5500A8001	D5500A8001	5.7 (14)	2.5 (64)	1.3 (0.6)

FEMALE SILENCER CONNECTORS

	Material	Fitting Pipe Size	Thread Type	Model Number		
				NPT Thread	BSPT Thread	
Hex Nipples	Steel	1-1/4	Male - Male	491J27	106J39	
		1-1/2	Male - Male	488J27	122J39	

LOCKOUT DEVICE

	Valve Model Use	Model Number	
Lockout Hasp	Lockout L-O-X® Classic Style	356A30	

SOLENOID PILOT INDICATOR LIGHT KITS

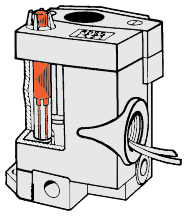

Illustration example.

	Kit Number		
	24 V DC	**110-120 V AC, 50-60 Hz**	**230 V AC, 50-60 Hz**
Indicator Light Kits	862K87-W	862K87-Z	862K87-Y
	To visually verify valve operation, indicator light kits are available for single solenoid models. Indicator lights are standard on double solenoid valves. The indicator light is illuminated when the solenoid is energized.		

CAUTIONS, WARNINGS And STANDARD WARRANTY

ROSS OPERATING VALVE, ROSS CONTROLS®, ROSS DECCO®, and AUTOMATIC VALVE INDUSTRIAL, collectively the "ROSS Group".

PRE-INSTALLATION or SERVICE

1. Before servicing a valve or other pneumatic component, be sure all sources of energy are turned off, the entire pneumatic system is shut down and exhausted, and all power sources are locked out (ref: OSHA 1910.147, EN 1037).

2. All ROSS Group Products, including service kits and parts, should be installed and/or serviced only by persons having training and experience with pneumatic equipment. Because any product can be tampered with and/or need servicing after installation, persons responsible for the safety of others or the care of equipment must check ROSS Group Products on a regular basis and perform all necessary maintenance to ensure safe operating conditions.

3. All applicable instructions should be read and complied with before using any fluid power system to prevent harm to persons or equipment. In addition, overhauled or serviced valves must be functionally tested prior to installation and use. If you have any questions, call your nearest ROSS Group location.

4. Each ROSS Group Product should be used within its specification limits. In addition, use only ROSS Group components to repair ROSS Group Products.

WARNINGS:
Failure to follow these instructions can result in personal injury and/or property damage.

FILTRATION and LUBRICATION

1. Dirt, scale, moisture, etc., are present in virtually every air system. Although some valves are more tolerant of these contaminants than others, best performance will be realized if a filter is installed to clean the air supply, thus preventing contaminants from interfering with the proper performance of the equipment. The ROSS Group recommends a filter with a 5-micron rating for normal applications.

2. All standard ROSS Group filters and lubricators with polycarbonate plastic bowls are designed for compressed air applications only. Use the metal bowl guard, where provided, to minimize danger from high pressure fragmentation in the event of bowl failure. Do not expose these products to certain fluids, such as alcohol or liquefied petroleum gas, as they can cause bowls to rupture, creating a combustible condition and hazardous leakage. Immediately replace crazed, cracked, or deteriorated bowls.

3. Only use lubricants which are compatible with materials used in the valves and other components in the system. Normally, compatible lubricants are petroleum base oils with oxidation inhibitors, an aniline point between 180°F (82°C) and 220°F (104°C), and an ISO 32, or lighter, viscosity. Avoid oils with phosphate type additives which can harm polyurethane components, potentially leading to valve failure which risks personal injury, and/or damage to property.

WARNINGS:
Failure to follow these instructions can result in personal injury and/or property damage.

AVOID INTAKE/EXHAUST RESTRICTION

1. Do not restrict air flow in the supply line. To do so could reduce the pressure of the supply air below minimum requirements for the valve and thereby causing erratic action.

2. Do not restrict a valve's exhaust port as this can adversely affect its operation. Exhaust silencers must be resistant to clogging and must have flow capacities at least as great as the exhaust capacities of the valves. Contamination of the silencer can result in reduced flow and increased back pressure.

WARNINGS: ***Failure to follow these instructions can result in personal injury and/or property damage.***

SAFETY APPLICATIONS

1. Mechanical Power Presses and other potentially hazardous machinery using a pneumatically controlled clutch and brake mechanism must use a press control double valve with a monitoring device. A double valve without a self-contained monitoring device should be used only in conjunction with a control system which assures monitoring of the valve. All double valve installations involving hazardous applications should incorporate a monitoring system which inhibits further operation of the valve and machine in the event of a failure within the valve mechanism.

2. Safe Exhaust (dump) valves without a self-contained monitoring device should be used only in conjunction with a control system which assures monitoring of the valve. All Safe Exhaust valve installations should incorporate a monitoring system which inhibits further operation of the valve and machine in the event of a failure within the valve mechanism.

3. Per specifications and regulations, the ROSS L-O-X® and L-O-X® with EEZ-ON®, N06 and N16 Series operation products are defined as energy isolation devices, NOT AS EMERGENCY STOP DEVICES.

WARNINGS:
Failure to follow these instructions can result in personal injury and/or property damage.

STANDARD WARRANTY

All products sold by the ROSS Group are warranted for a one-year period [with the exception of Filters, Regulators and Lubricators ("FRLs") which are warranted for a period of seven (7) years] from the date of purchase. All products are, during their respective warranty periods, warranted to be free of defects in material and workmanship. The ROSS Group's obligation under this warranty is limited to repair, replacement or refund of the purchase price paid for products which the ROSS Group has determined, in its sole discretion, are defective. All warranties become void if a product has been subject to misuse, misapplication, improper maintenance, modification or tampering. Products for which warranty protection is sought must be returned to the ROSS Group freight prepaid.

THE WARRANTY EXPRESSED ABOVE IS IN LIEU OF AND EXCLUSIVE OF ALL OTHER WARRANTIES AND THE ROSS GROUP EXPRESSLY DISCLAIMS ALL OTHER WARRANTIES EITHER EXPRESSED OR IMPLIED WITH RESPECT TO MERCHANTABILITY OR FITNESS FOR A PARTICULAR PURPOSE. THE ROSS GROUP MAKES NO WARRANTY WITH RESPECT TO ITS PRODUCTS MEETING THE PROVISIONS OF ANY GOVERNMENTAL OCCUPATIONAL SAFETY AND/OR HEALTH LAWS OR REGULATIONS. IN NO EVENT IS THE ROSS GROUP LIABLE TO PURCHASER, USER, THEIR EMPLOYEES OR OTHERS FOR INCIDENTAL OR CONSEQUENTIAL DAMAGES WHICH MAY RESULT FROM A BREACH OF THE WARRANTY DESCRIBED ABOVE OR THE USE OR MISUSE OF THE PRODUCTS. NO STATEMENT OF ANY REPRESENTATIVE OR EMPLOYEE OF THE ROSS GROUP MAY EXTEND THE LIABILITY OF THE ROSS GROUP AS SET FORTH HEREIN.

a global family

Americas	**ROSS** CONTROLS	USA	Tel: +1-248-764-1800	www.rosscontrols.com
	ROSS CONTROLS CANADA Ltd.	Canada	Tel: +1-416-251-7677	www.rosscanada.com
	ROSS DO BRASIL LTDA	Brazil	Tel: +55-11-4335-2200	www.rosscontrols.com.br
Europe	**ROSS** EUROPA GmbH	Germany	Tel: +49 (0)6103-7597-100	www.rosseuropa.com
	ROSS FRANCE SAS	France	Tel: +33-(0)1-49-45-65-65	www.rossfrance.com
	ROSS PNEUMATROL Ltd.	United Kingdom	Tel: +44 (0)1254 872277	www.rossuk.co.uk
Asia & Pacific	**ROSS** CONTROLS INDIA Pvt. Ltd.	India	Tel: +91-44-2624-9040	www.rosscontrolsindia.com
	ROSS CONTROLS (CHINA) Ltd.	China	Tel: +86-21-6915-7961	www.rosscontrolschina.com
	ROSS ASIA K.K.	Japan	Tel: +81-42-778-7251	www.rossasia.co.jp
	AUTOMATIC VALVE INDUSTRIAL LLC	USA	Tel: +1-248-474-6700	www.automaticvalve.com
	ROSS DECCO COMPANY	USA	Tel: +1-248-764-1800	www.rossdecco.com
	ROSS PNEUMATROL Ltd.	United Kingdom	Tel: +44 (0)1254 872277	www.pneumatrol.com
	manufactIS GmbH	Germany	Tel: +49 (0)2013-16843-0	www.manufactis.net

Full-Service Global Locations

There are ROSS Distributors Throughout the World

To meet your requirements across the globe, ROSS distributors are located throughout the world. Through ROSS or its distributors, guidance is available for the selection of ROSS products, both for those using fluid power components for the first time and those designing complex systems.

Other literature is available for engineering, maintenance, and service requirements.

If you need products or specifications not shown in this catalog, please visit ROSS' website, contact ROSS or your ROSS distributor. The ROSS Support Team will be happy to assist you in selecting the best product for your application.

